LIGHT FIXTURE SCHEDULE

TYPE	MANUFAC.	CATALOG#	VOLT.	LAMP TYPE	WATTS	DESCRIPTION / REMARKS	QTY.
A4	GE LIGHTING	LUS-C4-A-0-52-V1-T-35-VQ-CS -WHTE-BC	MVOLT	LED	37	4 1/2" WIDE X 8" HIGH X4' LONG LED LINEAR LIGHT FIXTURE, 3500K. FIXTURE SUSPENDED AT 14'-0" A.F.F. IN SALES AREA 101. REFER TO MOUNTING DETAIL 3/E1.0. SEE NOTE 2,4,6,7.	8
A8	GE LIGHTING	LUS-C8-A-0-A0-V1-T-35-VQ-CS -WHTE-BC	MVOLT	LED	73	4 1/2" WIDE X 8" HIGH X 8' LONG LED LINEAR LIGHT FIXTURE, 3500K. FIXTURE SUSPENDED AT 14'-0" A.F.F. IN SALES AREA 101. REFER TO MOUNTING DETAIL 3/E1.0. SEE NOTE 2,4,6,7.	91
A8NL	GE LIGHTING	LUS-C8-A-0-A0-V1-T-35-VQ-CS -WHTE-BC	MVOLT	LED	73	4 1/2" WIDE X 8" HIGH X 8' LONG LED LINEAR LIGHT FIXTURE, 3500K. FIXTURE SUSPENDED AT 14'-0" A.F.F. IN SALES AREA 101. CIRCUIT SECOND LINE FOR NIGHT LIGHT FIXTURE. REFER TO DETAIL 5/E1.0. SEE NOTE 2,4,6,7.	11
BA	METALUX	22FP4235C	MVOLT	LED	39	2'X2' LED FLAT DIFFUSED LENS LAY-IN LIGHT FIXTURE, 3500K, 4300 LUMENS UNV DRIVER WITH 0-10V DIMMING TO 10% STANDARD.	84
BA-E	METALUX	22FP4235C-EL7W	MVOLT	LED	39	2'X2' LED FLAT DIFFUSED LENS LAY-IN LIGHT FIXTURE, 3500K, 4300 LUMENS, UNV DRIVER WITH 0-10V DIMMING TO 10% STANDARD. EL7W BATTERY PACK TO PROVIDE BATTERY POWER FOR 90 MINUTES.	10
CA	LITHONIA	WL4-40L-EZ1-LP835	MVOLT	LED	40	5" WIDE X 4' HIGH X 4' LONG LED LENSED WALL BRACKET LIGHT FIXTURE, 3500K. MOUNT FIXTURE AT 8'-0" AFF, UNO.	2
CB	COOPER	S122DW-C-1005D-8-30-4FO-1-U-DD-F-W	MVOLT	LED	43	2.4" WIDE X 4" HIGH X 4' LONG LED LENSED WALL MOUNTED LIGHT FIXTURE , 3000K. MOUNT FIXTURE AT 9'-0" AFF, UNO.	3
E1	MIDMARK	255-022	120 VOLT	LED	84	255 SURGERY LIGHT - 115 VAC, 0.7A, 50/60 HZ, 84W. **PROVIDED BY PETSMART, INSTALLED BY CONTRACTOR.** SEE SPECIFICATIONS AND SHEET F2.0. CEILING MOUNT, ON/OFF SWITCH & DIMMER SWITCH MOUNTED ON FIXTURE.	1
E2	MIDMARK	122-1203-12	120 VOLT	LED	50	122 TREATMENT LIGHT - 115 VAC, 0.4A, 50/60 HZ, 50W. **PROVIDED BY PETSMART, INSTALLED BY CONTRACTOR.** SEE SPECIFICATIONS AND SHEET F2.0. TOWER MOUNT, ON/OFF SWITCH & DIMMER SWITCH MOUNTED ON FIXTURE.	2
EM	LITHONIA	LA-ELM6L-UVOLT-LTP-SDRT	MVOLT	LED	11	EMERGENCY BATTERY UNIT WITH 2-LAMP HEADS. EMERGENCY LIGHT FIXTURES IN MAIN SALES & AREAS TO ROOF DECK SHALL BE AT 16'-0" AFF TO BOTTOM OF UNIT. EMERGENCY LIGHT FIXTURES IN AREAS WITH CEILINGS SHALL BE SURFACE MOUNTED ON CEILING. EMERGENCY LIGHT FIXTURES IN FISH PREP 120 & FISH EQUIPMENT121 SHALL BE AT 12'-0" AFF TO BOTTOM OF UNIT.	40
G4	GE LIGHTING	LUS-I4-A-0-52-V1-T-35-VQ-CS-WHTE	MVOLT	LED	37	4 1/2" WIDE X 8" HIGH X 4' LONG LED LINEAR LIGHT FIXTURE, 3500K. IN RECEIVING 117 MOUNT LIGHTS IN BETWEEN JOISTS, ABOVE BOTTOM CHORD OF BAR JOISTS. IN FISH PREP. 120 MOUNT LIGHT AT 10'-0" AFF.	20
L	LUMARK	XTOR6BRL	MVOLT	LED	58	LED WALL PACK. MOUNT AT 14'-6" AFF TO CENTERLINE UNLESS NOTED OTHERWISE. DARK BRONZE FINISH. SEE FLOOR PLAN FOR ADDITIONAL INFORMATION.	14
M	GE LIGHTING	LRC-6R-80-15-NR-SD-CL-MR-835-VQ	277	LED	19	6" LED OPEN DOWN LIGHT WITH GE #93025091 - FRAMER KIT. UL LISTED FOR DAMP LOCATIONS	3
S	LITHONIA	LQM-S-W-3-R-120/277-ELN-M6	MVOLT	LED	1	EXIT SIGN, RED LETTERS, WITH BATTERY PACK. SEE DETAIL 4/E1.0. PENDANT MOUNTED EXIT SIGN(S) IN MAIN SALES AND/OR AREAS OPEN TO ROOF DECK SHALL BE AT 12'-0" AFF TO BOTTOM OF SIGN.	22
W	LITHONIA	ELM6L-UVOLT-LTP-SDRT-LLH	MVOLT	LED	-	EMERGENCY BATTERY UNIT W/O LAMP HEADS TO PROVIDE BATTERY POWER FOR EXTERIOR REMOTE HEADS.	3
X	LITHONIA	ELMRW-SP640L-DWHXD-T	6 (LOW VOLT.)	(2) 1.5W LAMPS, FURNISHED W/FIXTURE	3	REMOTE LAMP HEADS FOR EXTERIOR EMERGENCY LIGHTING. CONTRACTOR SHALL PROVIDE MANUFACTURER RECOMMENDED WIRE SIZE BETWEEN BATTERY POWER PACK AND REMOTE HEADS FOR VOLTAGE DROP. MOUNT 1'-0" ABOVE DOOR HEADER UNLESS NOTED OTHERWISE.	3

1. CONTRACTOR SHALL CONTACT LIGHTING DISTRIBUTOR FOR ORDERING INFORMATION. THIS IS A REQUIRED VENDOR. SEE REQUIRED VENDOR LIST ON F2.0
2. SEE PLAN FOR LENGTH AND QUANTITY OF LINEAR FIXTURES PER ROW FOR TYPES 'A4', 'A8' AND 'A8NL'. (37 WATTS PER 4 FOOT LENGTH)
3. ELECTRICAL CONTRACTOR TO VERIFY ALL QUANTITIES OF LIGHT FIXTURES PRIOR TO ORDERING FIXTURES.
4. FURNISH FIXTURE WITH ALL NECESSARY STARTER KITS, JOINERS, CONNECTIONS, ENDCAPS, ETC. FOR A COMPLETE AND CONTINUOUS FIXTURE LENGTH RUN.
5. **ALL LIGHT FIXTURES IN THIS SCHEDULE MAY NOT BE APPLICABLE TO THIS PROJECT.**
6. LIGHT FIXTURES TO BE SUPPLIED WITH 21' MOUNTING CABLES, POWER FEED CABLE, AND MOUNTING BRACKETS WITH SUSPENSION KIT.
7. GE STARTER KIT (10 ROW) #93046696-WH FOR CONTINUOUS ROW FIXTURES. PROVIDE (1) STARTER KIT PER CONTINUOUS ROW.

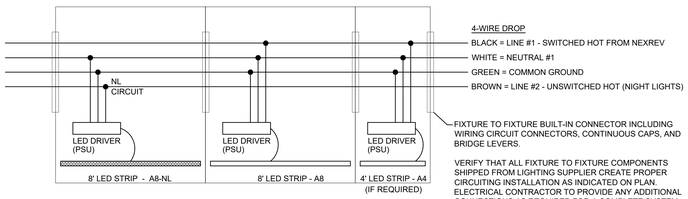

5 E1.0 SALES AREA LIGHTING FIXTURE WIRING DETAIL

SCALE: N.T.S.

NOTES:
1. CONTRACTOR TO PROVIDE ALL NECESSARY HARDWARE FOR INSTALLATION.
2. LIGHT FIXTURES THAT RUN PARALLEL WITH THE JOISTS SHALL REQUIRE TWO (2) SEPARATE PIECES OF UNISTRUT, ONE (1) AT EACH END OF LIGHT FIXTURE FOR THE AIRCRAFT CABLE HANGERS.
3. AIR CRAFT CABLE TO BE TRIMMED AFTER FIXTURE INSTALLATION.
4. VERIFY LIGHT FIXTURE AND INSTALLATION WITH PETSMART PROJECT REPRESENTATIVE(CONFIGURATION VARIES PER PROJECT).
5. CONTRACTOR TO BID GREATER THAN 10 FEET AIR CRAFT CABLE BASED ON SITE SPECIFIC CONDITIONS.
6. PROVIDE AND INSTALL SEISMIC RESTRAINT FOR LIGHT FIXTURES AS REQUIRED BY LOCAL BUILDING CODE.

DESIGNER NOTE:
IF PROJECT IS DETERMINED TO BE IN A SEISMIC ZONE, REVISE NOTE 6 TO INCLUDE REFERENCE TO SEISMIC DRAWING.

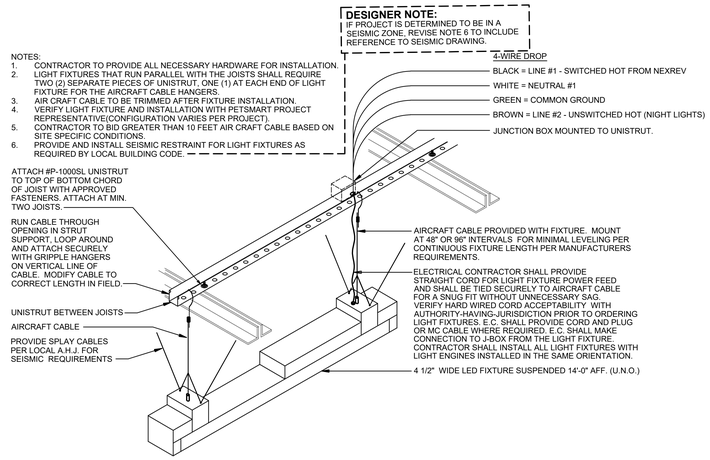

3 E1.0 LIGHTING FIXTURE MOUNTING DETAIL

SCALE: N.T.S.

NOTE:
IF CONDUIT PIPING LAYOUT IS NOT SHOWN, GROUP CONDUIT/PIPE ROUTE FOR MINIMUM SUPPORTS AND HOLD TIGHT UNDER SIDE OF ROOF DECK. COORDINATE WITH ALL TRADES.

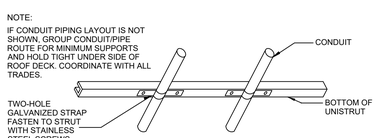

MINIMUM SPACING BETWEEN SUPPORTS:
CONDUIT ---------- 1/2" THRU 1-1/4" ---------- 3' EMT
OR ---------- 1-1/2" THRU 2" ---------- 8'

2 E1.0 CONDUIT/PIPE SUPPORT

SCALE: N.T.S.

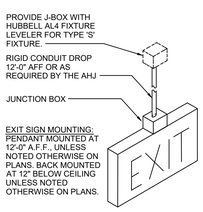

4 E1.0 PENDANT MOUNT EXIT SIGN

SCALE: N.T.S.

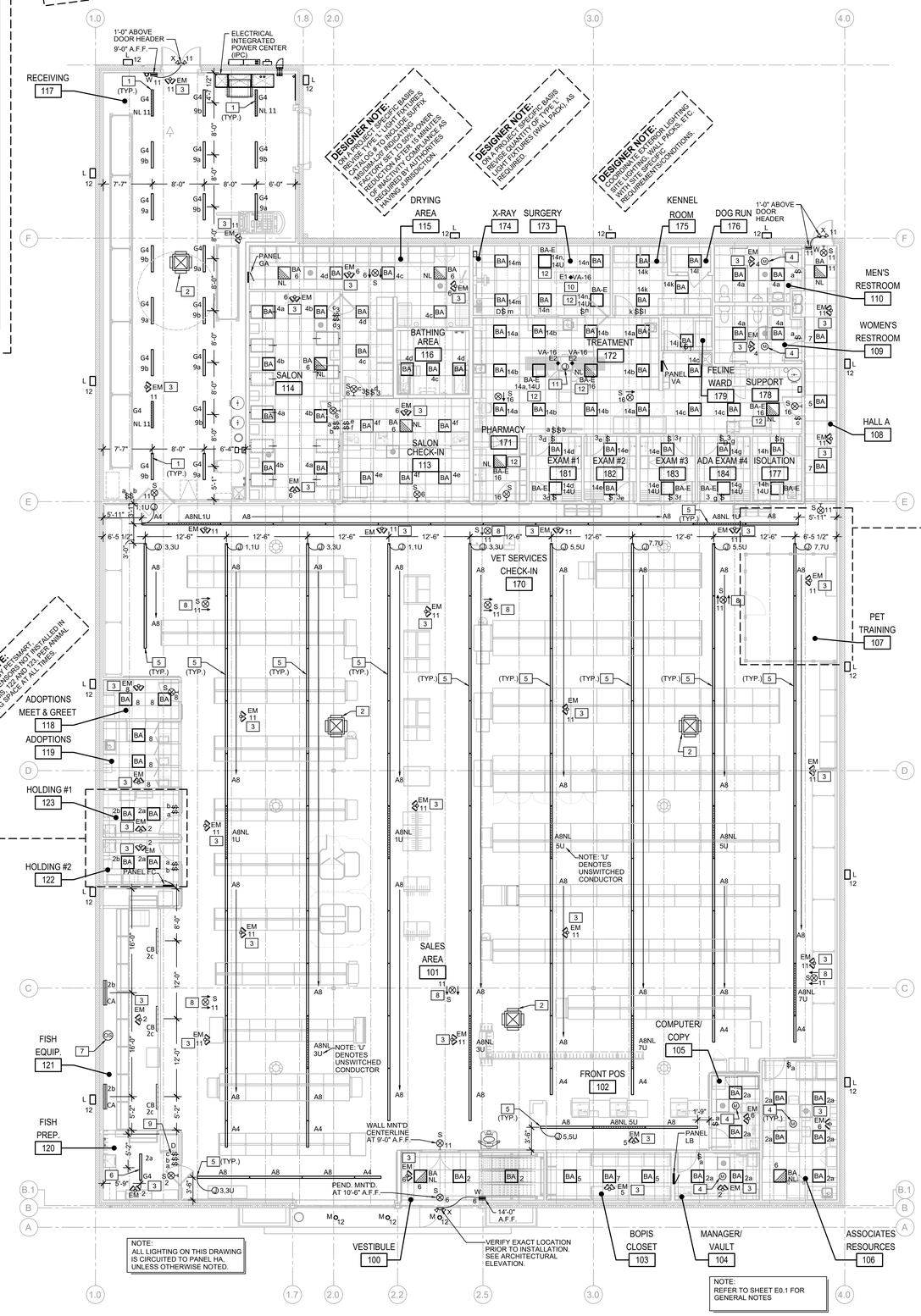

1 E1.0 LIGHTING FLOOR PLAN

SCALE: 1/8" = 1' - 0"

DESIGNER NOTE: DESIGNER TO SPECIFY IN LIGHT FIXTURE SCHEDULE OR ON DRAWING IF A LIGHT FIXTURE IS SUPPLIED BY ANOTHER SOURCE OTHER THAN NATIONAL ACCOUNT VENDOR - EXAMPLE: DEVELOPER, SHELL ARCHITECT, OWNER, ETC.. PROVIDE APPROPRIATE CONTACT INFORMATION.

DESIGNER NOTE: DESIGNER TO SPECIFY ON A SPECIFIC BASIS REVISE TYPE & QUANTITY OF TYPE S LIGHT FIXTURES (WALL PACKS) AS REQUIRED.

DESIGNER NOTE: DESIGNER TO SPECIFY ON A SPECIFIC BASIS REVISE TYPE & QUANTITY OF TYPE S LIGHT FIXTURES (WALL PACKS) AS REQUIRED BY AUTHORITIES HAVING JURISDICTION.

DESIGNER NOTE: COORDINATE EXTERIOR LIGHTING SITE LIGHTING, WALL PACKS, ETC. WITH ARCHITECT REQUIREMENTS/CONDITIONS.

DESIGNER NOTE: PROVIDE ADDITIONAL LIGHTING IN PET TRAINING AREA AS REQUIRED BY AUTHORITY HAVING JURISDICTION.

DESIGNER NOTE: DESIGNER TO CONFIRM ON A SPECIFIC BASIS WHEN PROVIDING SPECIFICATION GRADE RECEPTACLES ON LIGHTING CIRCUITS. PROVIDE ADDITIONAL RECEPTACLES AS REQUIRED BY AUTHORITY HAVING JURISDICTION.

DESIGNER NOTE: PROVIDE ADDITIONAL LIGHTING IN ADOPTIONS AREA AS REQUIRED BY AUTHORITY HAVING JURISDICTION.

DESIGNER NOTE: IF PROJECT IS DETERMINED TO BE IN A SEISMIC ZONE, REVISE NOTE 6 TO INCLUDE REFERENCE TO SEISMIC DRAWING.

DESIGNER NOTE: DESIGNER TO CONFIRM ON A SPECIFIC BASIS WHEN PROVIDING SPECIFICATION GRADE RECEPTACLES ON LIGHTING CIRCUITS. PROVIDE ADDITIONAL RECEPTACLES AS REQUIRED BY AUTHORITY HAVING JURISDICTION.

DESIGNER NOTE: ON A SPECIFIC BASIS REVISE LIGHT FIXTURE SPACING FROM 12'-6" TO 10'-0" WHERE NECESSARY TO COMPLY WITH SEISMIC REQUIREMENTS.

DESIGNER NOTE: DESIGNER TO CONFIRM ON A SPECIFIC BASIS WHEN PROVIDING SPECIFICATION GRADE RECEPTACLES ON LIGHTING CIRCUITS. PROVIDE ADDITIONAL RECEPTACLES AS REQUIRED BY AUTHORITY HAVING JURISDICTION.

DESIGNER NOTE: ON A SPECIFIC BASIS REVISE LIGHT FIXTURE SPACING FROM 12'-6" TO 10'-0" WHERE NECESSARY TO COMPLY WITH SEISMIC REQUIREMENTS.

DESIGNER NOTE: ON A SPECIFIC BASIS REVISE LIGHT FIXTURE SPACING FROM 12'-6" TO 10'-0" WHERE NECESSARY TO COMPLY WITH SEISMIC REQUIREMENTS.

DESIGNER NOTE: DESIRE NAV PROTOTYPE FOOT CANDLE LEVELS ARE MAINTAINED THROUGHOUT THE MAIN SALES AREA. ADJUST FIXTURE QUANTITIES AS NECESSARY TO ACHIEVE THE PROTOTYPE FOOT CANDLE LEVELS. WHEN A NON-PROTOTYPE BUILDING IS BEING USED.

DESIGNER NOTE: DESIGNER TO CONFIRM ON A SPECIFIC BASIS WHEN PROVIDING SPECIFICATION GRADE RECEPTACLES ON LIGHTING CIRCUITS. PROVIDE ADDITIONAL RECEPTACLES AS REQUIRED BY AUTHORITY HAVING JURISDICTION.

DESIGNER NOTE: ON A SPECIFIC BASIS REVISE LIGHT FIXTURE SPACING FROM 12'-6" TO 10'-0" WHERE NECESSARY TO COMPLY WITH SEISMIC REQUIREMENTS